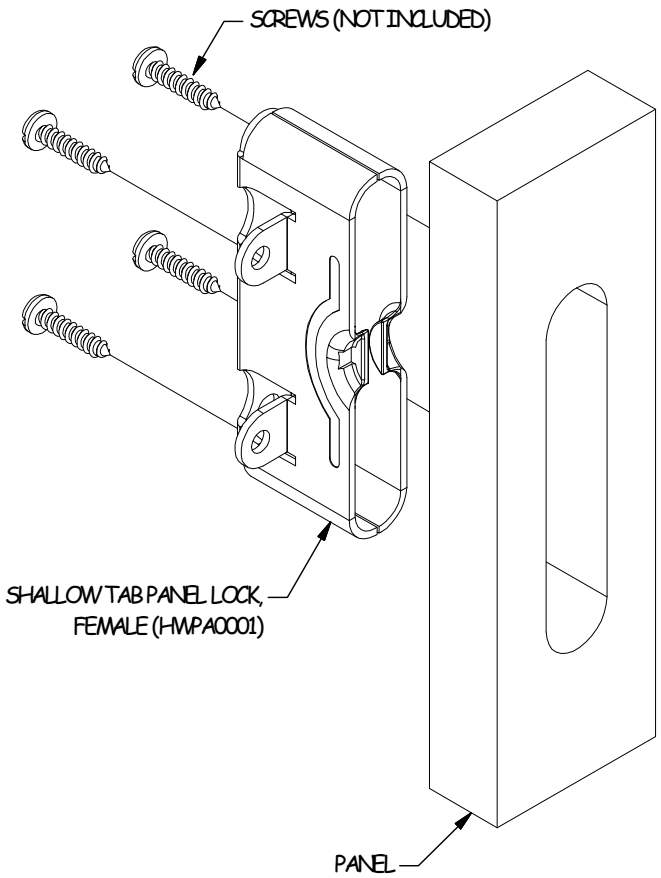

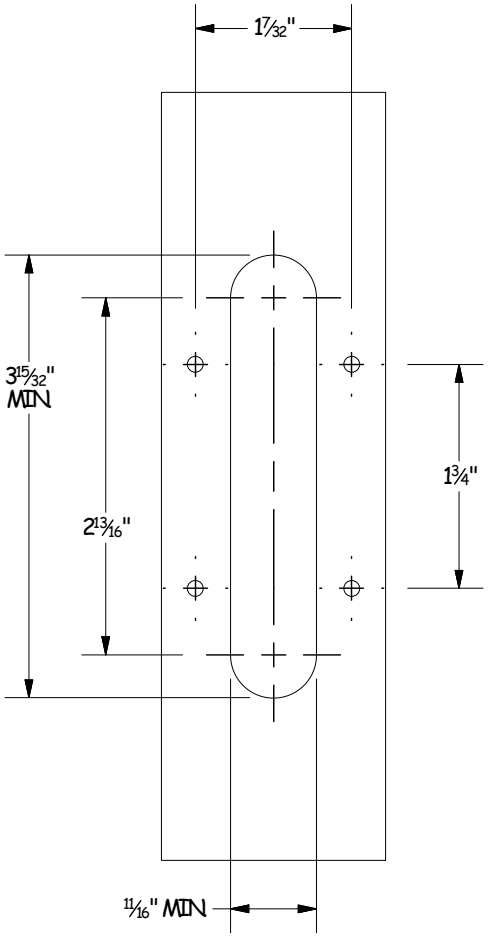

This drawing represents visual concepts and construction suggestions only. Please review construction methods and material details for suitability. Final approval is required before construction can begin. Please contact Rose Brand to discuss alterations to the project.

ROSE BRAND

PO BOX 1536 SECAUCUS, NJ 07096

800-223-1624 RoseBrand.com

All Dimensions in Inches (in) unless stated otherwise.

Tolerances:

.X = ±0.2
.0X = ±0.01
.00X = ±0.005
.000X = ±0.0005

X/X = ± 1/16°
∠ = ± 1/2°

Unless stated otherwise.

CLIENT	ROSE BRAND
PROJECT	REFERENCE FILE
TITLE	SHALLOW TAB PANEL LOCK, FEMALE INSTALL
MATERIAL	N/A
FINISH	N/A
DWG NO	HWPA0001
REV	-
SIZE	A
QUANTITY	N/A
SCALE	NTS
DRAWN BY	DG
DATE	10/30/2014
	Sheet 1 of 1