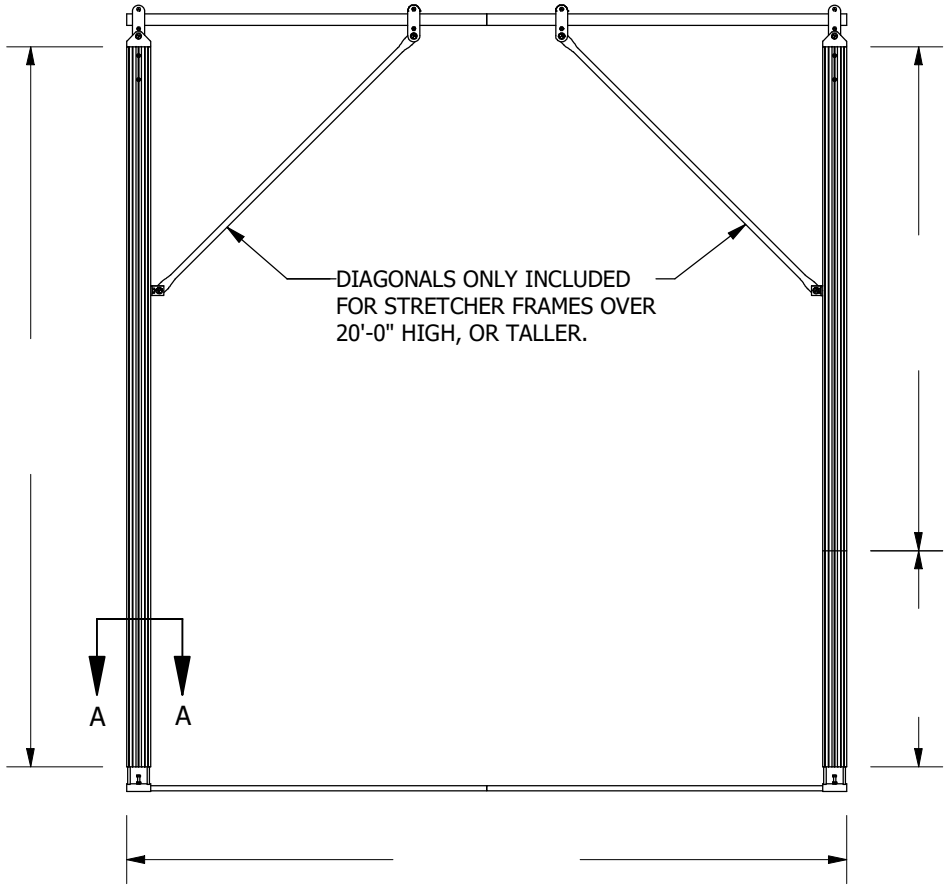


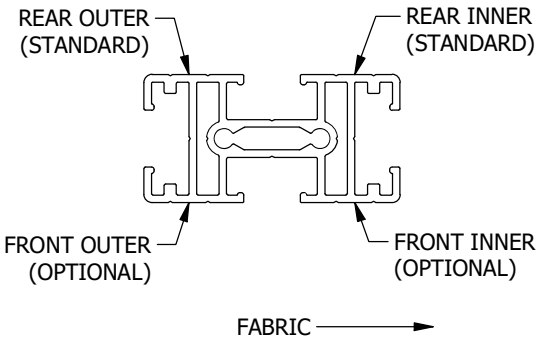


**NOTES:**
-REVERSE & REPEAT

A — VELCRO LOCATION
SCALE: 4" = 1'-0"

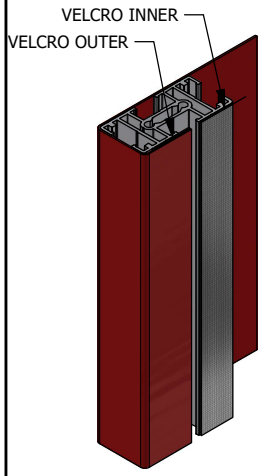


GOODS WRAP &
ATTACH TO REAR
(STANDARD)

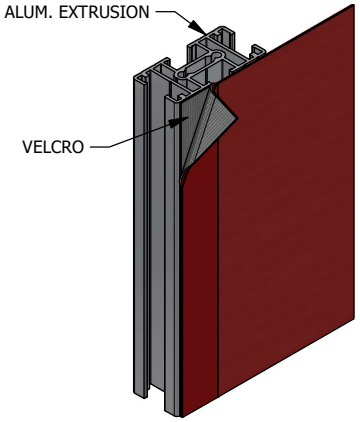


GOODS ATTACH
TO FRONT
(OPTIONAL)

***COLOR OF GOODS WILL VARY***

VELCRO ATTACHMENT EXAMPLES
SCALE: NTS

This drawing represents visual concepts and construction suggestions only. Please review construction methods and material details for suitability. Final approval is required before construction can begin. Please contact Rose Brand to discuss alterations to the project.

**ROSE BRAND**

PO BOX 1536 SECAUCUS, NJ 07096
800-223-1624 RoseBrand.com

All Dimensions in Inches (in) unless stated otherwise.

Tolerances:
.X = ±0.2
.0X = ±0.01
.00X = ±0.005
.000X = ±0.0005
X/X = ± 1/16"
∠ = ± 1/2°

Unless stated otherwise.

| | | | |
|---|---|---|---|
| CLIENT: ROSE BRAND | | PROJECT: STRETCHER FRAME SYSTEM | |
| TITLE: OVERVIEW | | | |
| SIZE: A | DWG NO: RB-Stretcher Frame Overview Packet - Final | | REV: A |
| SCALE: AS NOTED | DRAWN BY: D. GUADAGNINO | DATE: 7/24/2024 | Sheet 1 of 6 |

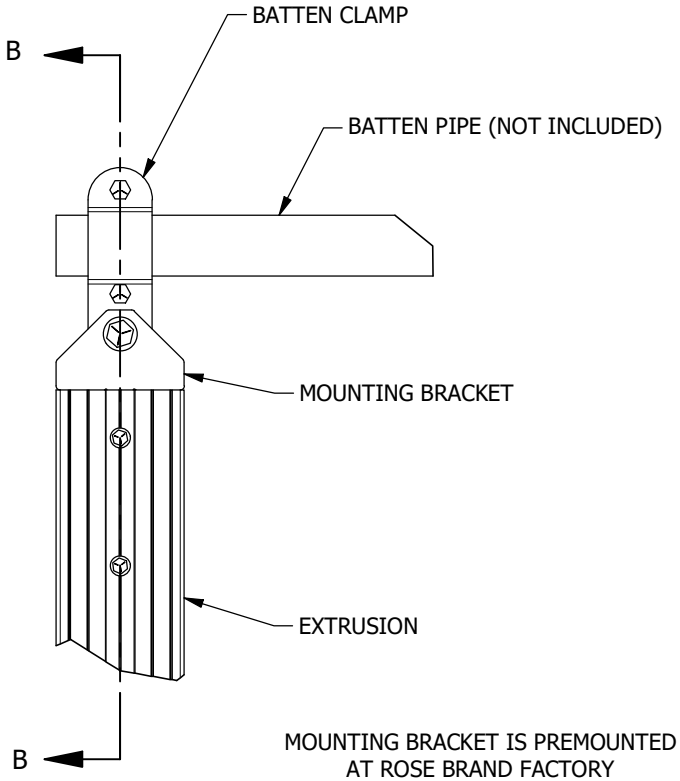


DETAIL: A
SCALE: 2" = 1'-0"

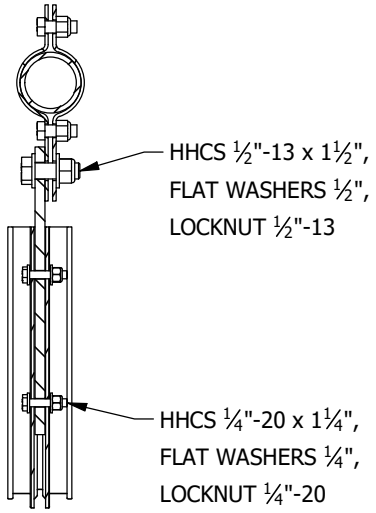


SECTION: B- B
SCALE: 2" = 1'-0"

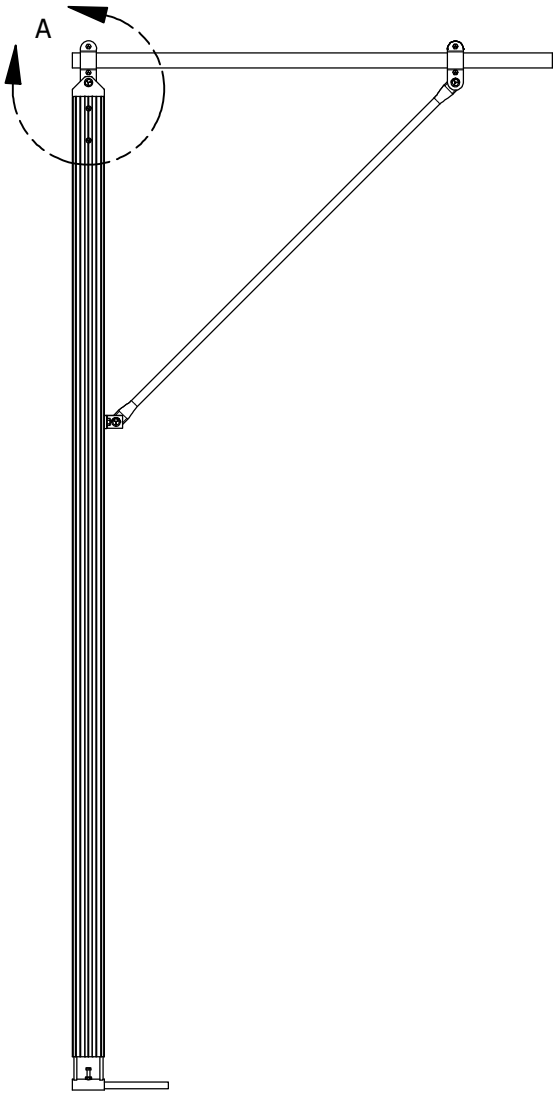


STRETCHER FRAME ASSEMBLY: FRONT VIEW
SCALE: 1/2" = 1'-0"

This drawing represents visual concepts and construction suggestions only. Please review construction methods and material details for suitability. Final approval is required before construction can begin. Please contact Rose Brand to discuss alterations to the project.

ROSE BRAND

PO BOX 1536 SECAUCUS, NJ 07096

800-223-1624 RoseBrand.com

All Dimensions in Inches (in) unless stated otherwise.

Tolerances:

| | | | |
|---|---|---|---|
| .X | = ±0.2 | X/X | = ± 1/16" |
| .0X | = ±0.01 | ∠ | = ± 1/2° |
| .00X | = ±0.005 | | |
| .000X | = ±0.0005 | | |

Unless stated otherwise.

| | | | |
|---|---|---|---|
| CLIENT: ROSE BRAND | | PROJECT: STRETCHER FRAME SYSTEM | |
| TITLE: MOUNTING BRACKET INSTALL | | | |
| SIZE: A | DWG NO: RB-Stretcher Frame Overview Packet - Final | | REV: A |
| SCALE: AS NOTED | DRAWN BY: D. GUADAGNINO | DATE: 7/24/2024 | Sheet 2 of 6 |

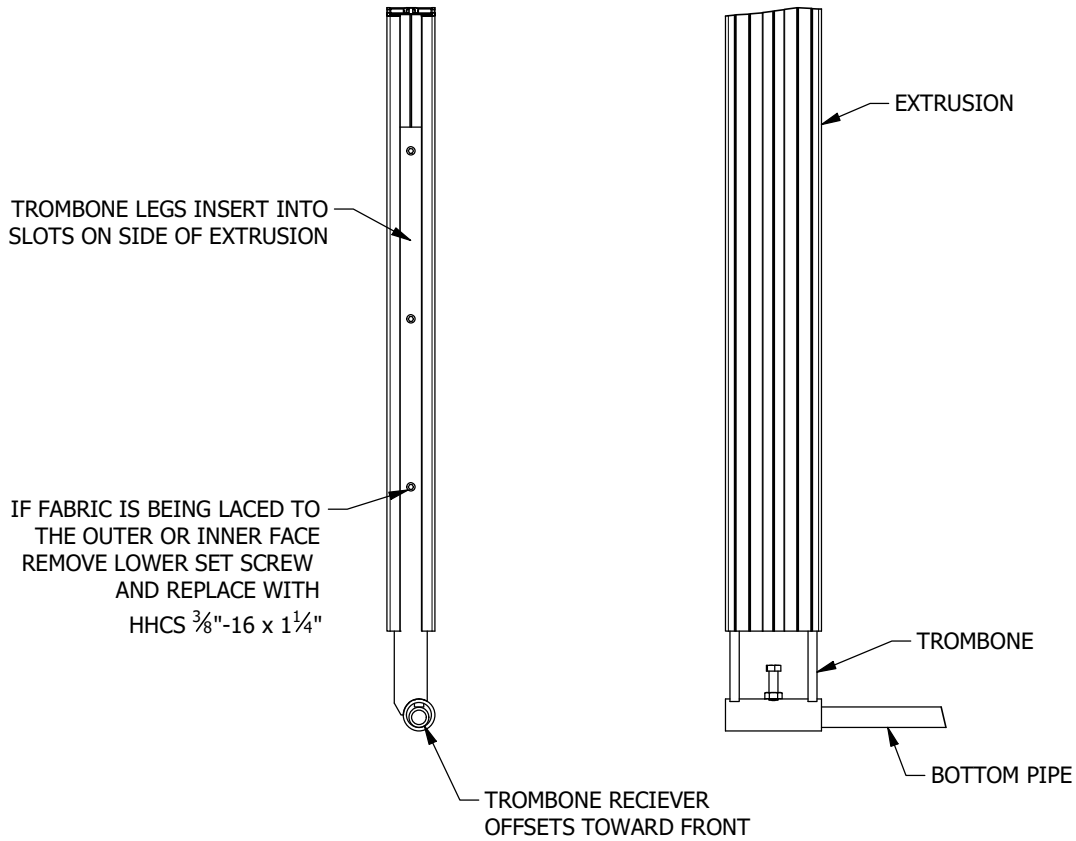


TROMBONE IS PREMOUNTED AT ROSE BRAND FACTORY

DETAIL: A
SCALE: 1 1/2" = 1'-0"

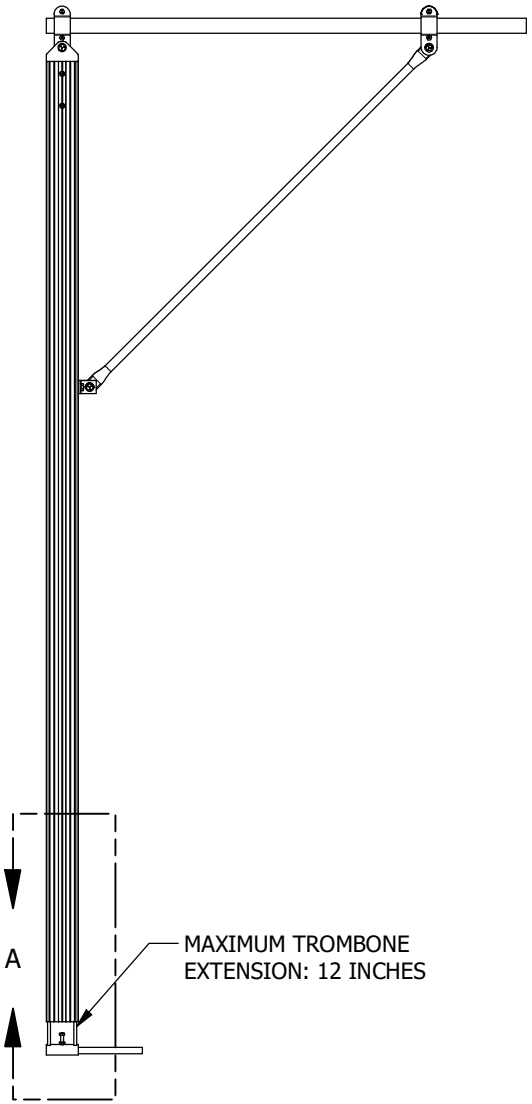


STRETCHER FRAME ASSEMBLY: FRONT VIEW
SCALE: 1/2" = 1'-0"

This drawing represents visual concepts and construction suggestions only. Please review construction methods and material details for suitability. Final approval is required before construction can begin. Please contact Rose Brand to discuss alterations to the project.

ROSE BRAND
PO BOX 1536 SECAUCUS, NJ 07096
800-223-1624 RoseBrand.com

All Dimensions in Inches (in) unless stated otherwise.

Tolerances:
.X = ±0.2
.0X = ±0.01
.00X = ±0.005
.000X = ±0.0005
X/X = ± 1/16"
∠ = ± 1/2°

Unless stated otherwise.

| | |
|---|---|
| CLIENT | ROSE BRAND |
| PROJECT | STRETCHER FRAME SYSTEM |
| TITLE | TROMBONE INSTALL |
| SIZE | A |
| DWG NO | RB-Stretcher Frame Overview Packet - Final |
| REV | A |
| SCALE | AS NOTED |
| DRAWN BY | D. GUADAGNINO |
| DATE | 7/24/2024 |
| | Sheet 3 of 6 |

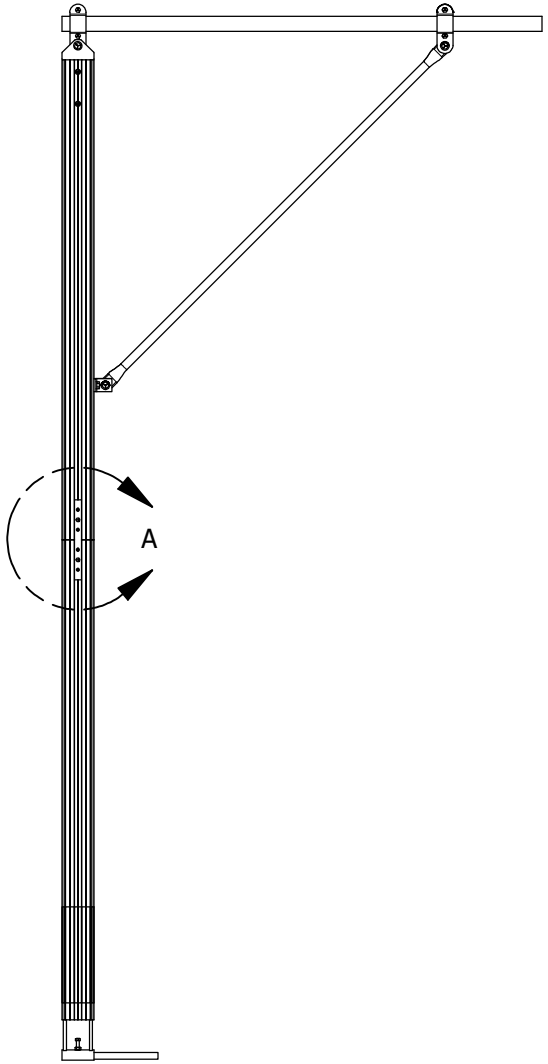


STRETCHER FRAME ASSEMBLY: FRONT VIEW
SCALE: 1/2" = 1'-0"

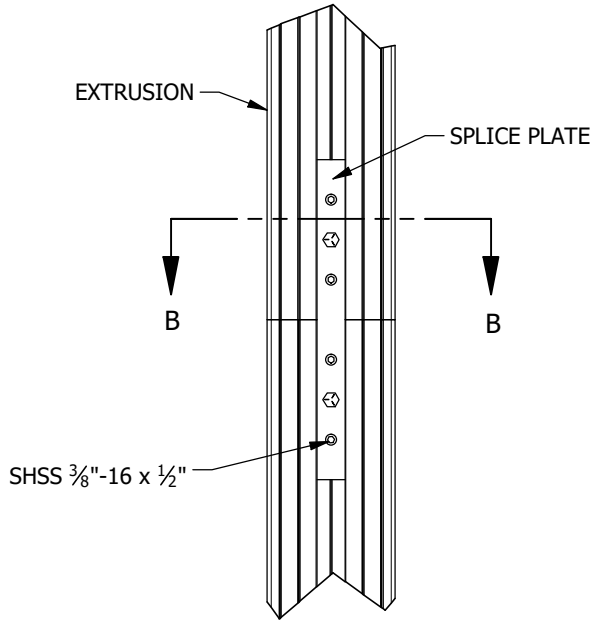


DETAIL: A
SCALE: 2" = 1'-0"

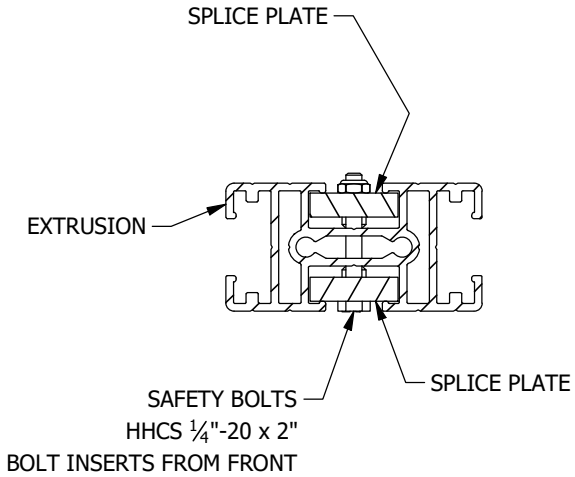


STRETCHER FRAME EXTRUSIONS ARE PREDRILLED AND FIT FOR SPLICE PLATES AT THE ROSE BRAND FACTORY.

SECTION: B-B
SCALE: 4" = 1'-0"

This drawing represents visual concepts and construction suggestions only. Please review construction methods and material details for suitability. Final approval is required before construction can begin. Please contact Rose Brand to discuss alterations to the project.

ROSE BRAND
PO BOX 1536 SECAUCUS, NJ 07096
800-223-1624 RoseBrand.com

All Dimensions in Inches (in) unless stated otherwise.

Tolerances:
.X = ±0.2
.0X = ±0.01
.00X = ±0.005
.000X = ±0.0005
X/X = ± 1/16"
∠ = ± 1/2°

Unless stated otherwise.

| | |
|---|---|
| CLIENT | ROSE BRAND |
| PROJECT | STRETCHER FRAME SYSTEM |
| TITLE | SPLICE PLATE INSTALL (OPTIONAL) |
| SIZE | A |
| DWG NO | RB-Stretcher Frame Overview Packet - Final |
| REV | A |
| SCALE | AS NOTED |
| DRAWN BY | D. GUADAGNINO |
| DATE | 7/24/2024 |
| | Sheet 4 of 6 |

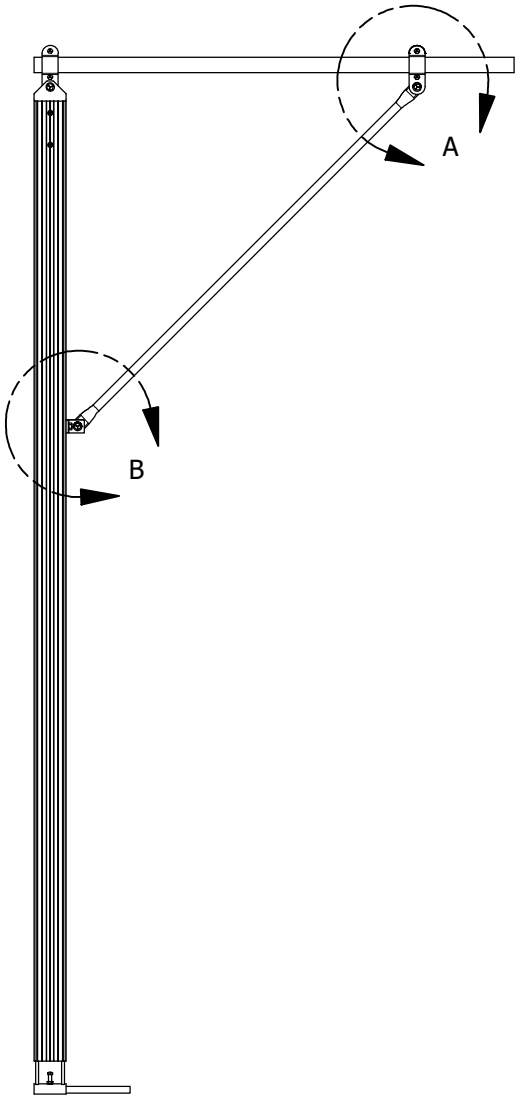


STRETCHER FRAME ASSEMBLY: FRONT VIEW
SCALE: 1/2" = 1'-0"

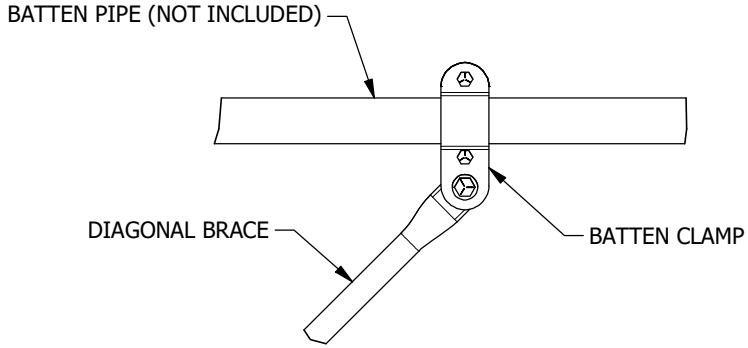

DETAIL: A
SCALE: 1 1/2" = 1'-0"

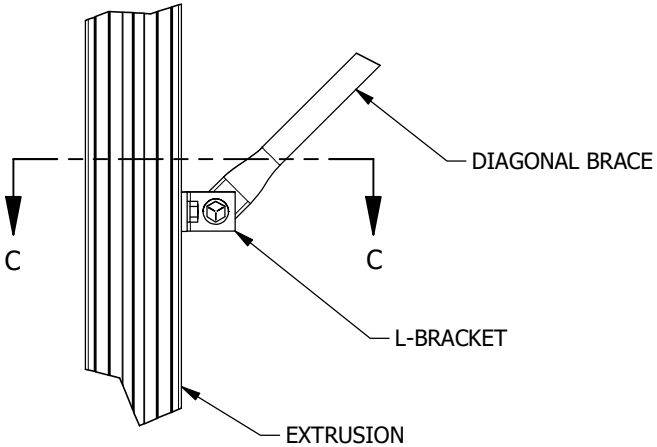


DETAIL: B
SCALE: 1 1/2" = 1'-0"

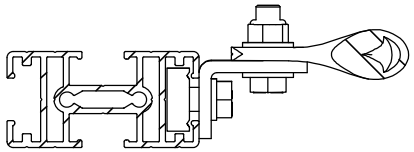

SECTION: C-C
SCALE: 3" = 1'-0"

*** DIAGONALS ONLY INCLUDED FOR STRETCHER FRAMES OVER 20'-0" HIGH, OR TALLER. ***

This drawing represents visual concepts and construction suggestions only. Please review construction methods and material details for suitability. Final approval is required before construction can begin. Please contact Rose Brand to discuss alterations to the project.


ROSE BRAND
PO BOX 1536 SECAUCUS, NJ 07096
800-223-1624 RoseBrand.com


All Dimensions in Inches (in) unless stated otherwise.

Tolerances:
.X = ±0.2
.0X = ±0.01
.00X = ±0.005
.000X = ±0.0005
X/X = ± 1/16"
∠ = ± 1/2°

Unless stated otherwise.

| | |
|---|---|
| CLIENT | ROSE BRAND |
| PROJECT | STRETCHER FRAME SYSTEM |
| TITLE | DIAGONAL BRACE INSTALL (OPTIONAL) |
| SIZE | A |
| DWG NO | RB-Stretcher Frame Overview Packet - Final |
| REV | A |
| SCALE | AS NOTED |
| DRAWN BY | D. GUADAGNINO |
| DATE | 7/24/2024 |
| | Sheet 5 of 6 |

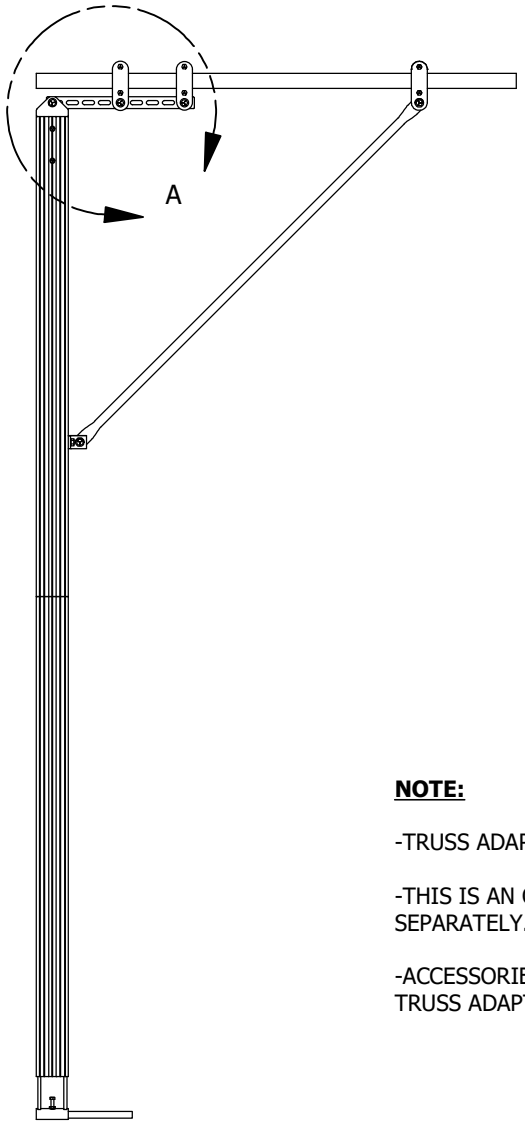


STRETCHER FRAME ASSEMBLY: FRONT VIEW

SCALE: 1/2" = 1'-0"

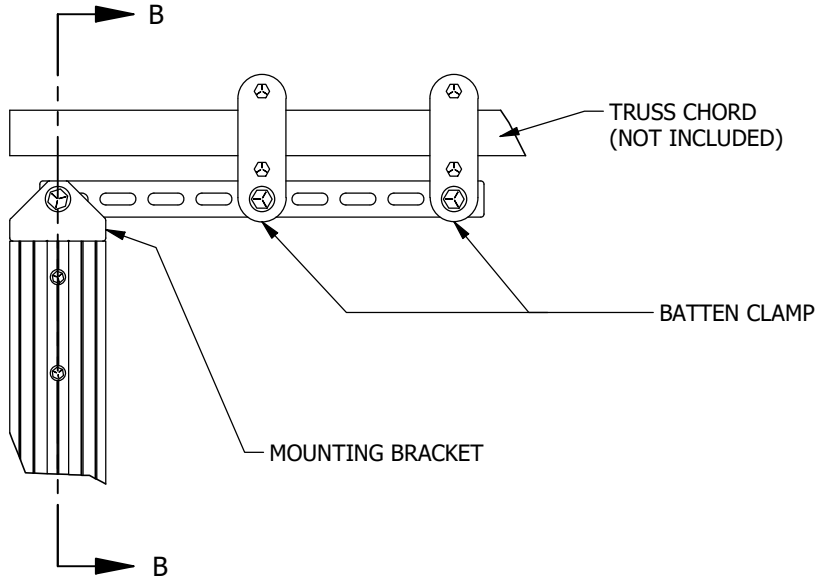


DETAIL A

SCALE 1 1/2" = 1'-0"

**NOTE:**

-TRUSS ADAPTER REPLACES SINGLE BATTEN CLAMP

-THIS IS AN OPTIONAL ACCESSORY AND MUST BE ORDERED SEPARATELY.

-ACCESSORIES INCLUDE ADDITIONAL BATTEN CLAMP AND TRUSS ADAPTER PLATE WITH HARDWARE.

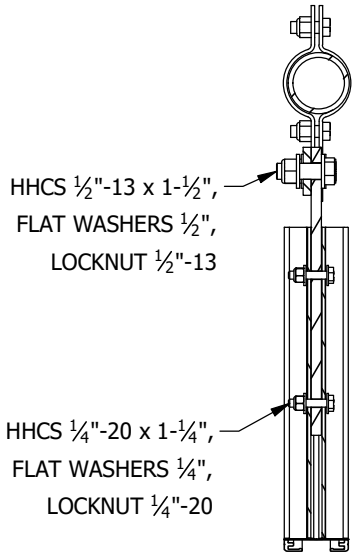


SECTION B-B

SCALE 2" = 1'-0"

This drawing represents visual concepts and construction suggestions only. Please review construction methods and material details for suitability. Final approval is required before construction can begin. Please contact Rose Brand to discuss alterations to the project.

ROSE BRAND

PO BOX 1536 SECAUCUS, NJ 07096

800-223-1624 RoseBrand.com

All Dimensions in Inches (in) unless stated otherwise.

Tolerances:

| | | | |
|---|---|---|---|
| .X | = ±0.2 | X/X | = ± 1/16" |
| .0X | = ±0.01 | ∠ | = ± 1/2° |
| .00X | = ±0.005 | | |
| .000X | = ±0.0005 | | |

Unless stated otherwise.

| | | | |
|---|---|---|---|
| CLIENT: ROSE BRAND | | PROJECT: STRETCHER FRAME SYSTEM | |
| TITLE: TRUSS ADAPTER INSTALL (OPTIONAL) | | | |
| SIZE: A | DWG NO: RB-Stretcher Frame Overview Packet - Final | | REV: A |
| SCALE: AS NOTED | DRAWN BY: D. GUADAGNINO | DATE: 7/24/2024 | Sheet 6 of 6 |

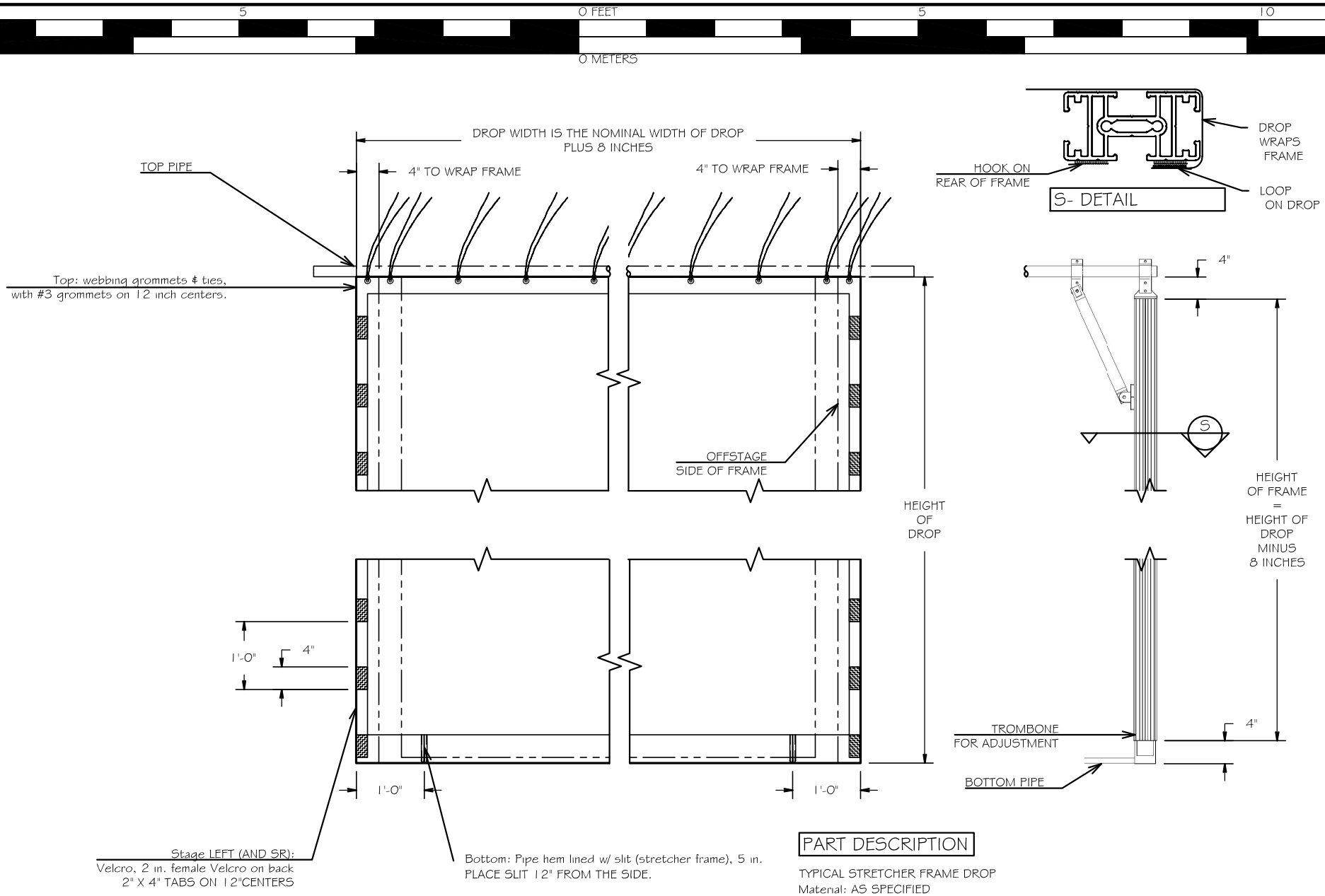


DROP WRAPS FRAME

A DROP FOR STRETCHER FRAME
SCHEMATIC REAR VIEW

SCALE: 1/2"=1'-0"

## PART DESCRIPTION

TYPICAL STRETCHER FRAME DROP
Material: AS SPECIFIED
HEIGHT OF DROP IS THE SPECIFIED HEIGHT OF THE DROP
WIDTH OF THE DROP IS THE SPECIFIED WIDTH PLUS + 8"
With 0% Added Fullness, Unlined
Top: webbing grommets & ties, with #3 grommets on 12 inch centers.
Bottom: Pipe hem lined w/ slit (stretcher frame), 5 in.
PLACE SLIT 12" FROM THE SIDE.
Stage Right: Velcro, 2 in. female Velcro on back
2" X 4" TABS ON 12" CENTERS
Stage Left: Velcro, 2 in. female Velcro on back
2" X 4" TABS ON 12" CENTERS

This drawing represents visual concepts and construction suggestions only. Please review construction methods and material details for suitability. Final approval is required before construction can begin. Please contact Rose Brand to discuss alterations to the project.

ROSE BRAND
PO BOX 1536 SECAUCUS, NJ 07096
800-223-1624 rosebrand.com

CUSTOMER: ROSE BRAND
PROJECT: STRETCHER FRAME
PIECE: TYPICAL SEWINGDETAILS
SCALE: AS NOTED DRAWN BY: T SULLIVAN 6/25/2024

QUOTE:
ORDER:
LINE: DROP WRAPS FRAME
PAGE: PAGE 1
REV: A

PRINT ON: 8 1/2 x 11-(LETTER PAPER)

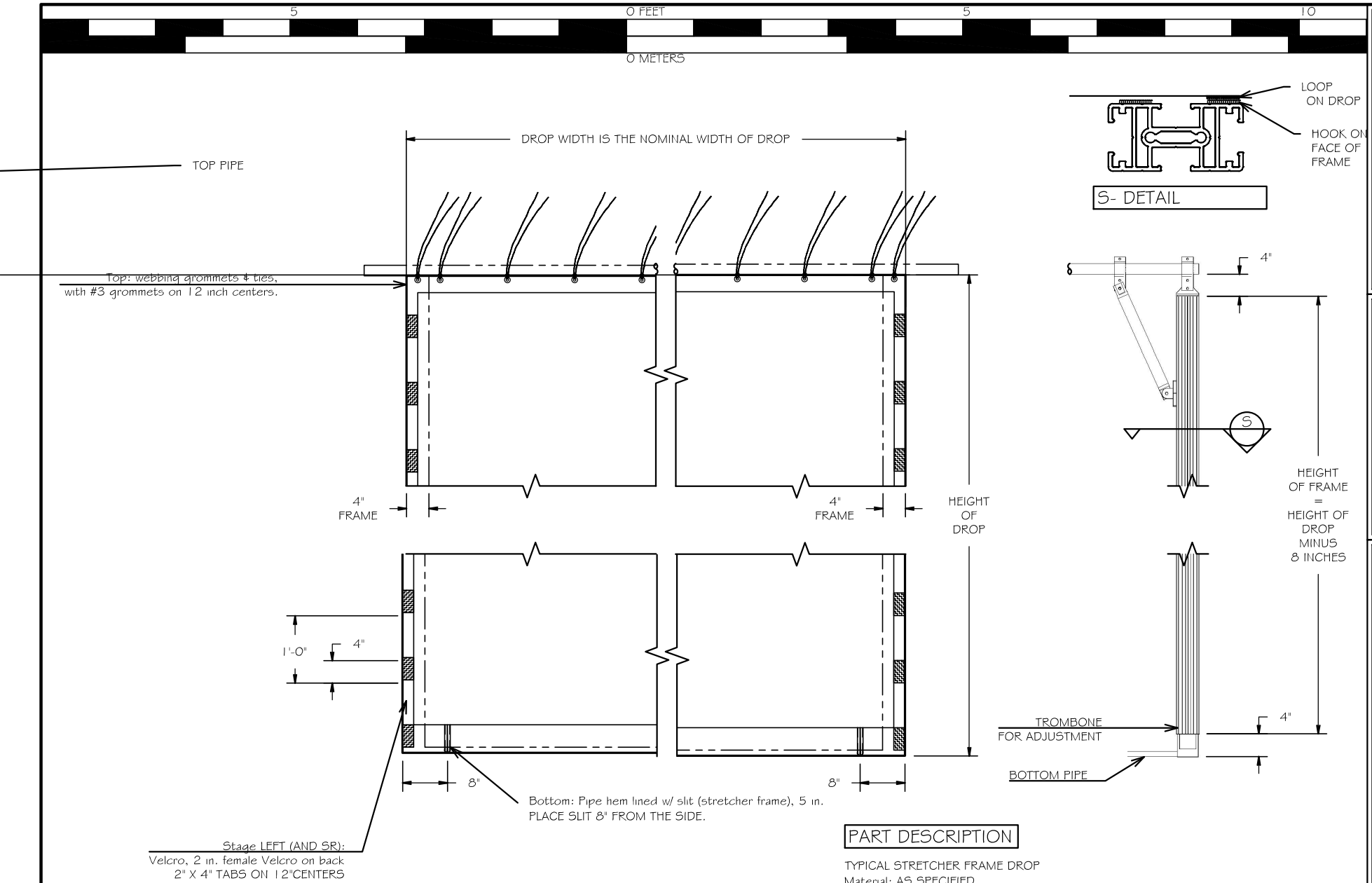


VELCRO TO FACE OF FRAME

A DROP FOR STRETCHER FRAME SCHEMATIC REAR VIEW

SCALE: 1/2"=1'-0"

## PART DESCRIPTION

TYPICAL STRETCHER FRAME DROP
Material: AS SPECIFIED
HEIGHT OF DROP IS THE SPECIFIED HEIGHT OF THE DROP
WIDTH OF THE DROP IS THE SPECIFIED WIDTH PLUS + 8"
With 0% Added Fullness, Unlined
Top: webbing grommets & ties, with #3 grommets on 12 inch centers.
Bottom: Pipe hem lined w/ slit (stretcher frame), 5 in.
PLACE SLIT 8" FROM THE SIDE.
Stage Right: Velcro, 2 in. female Velcro on back
2" X 4" TABS ON 12" CENTERS
Stage Left: Velcro, 2 in. female Velcro on back
2" X 4" TABS ON 12" CENTERS

This drawing represents visual concepts and construction suggestions only. Please review construction methods and material details for suitability. Final approval is required before construction can begin. Please contact Rose Brand to discuss alterations to the project.

ROSE BRAND
PO BOX 1536 SECAUCUS, NJ 07096
800-223-1624 rosebrand.com

CUSTOMER: ROSE BRAND
PROJECT: STRETCHER FRAME
PIECE: TYPICAL SEWINGDETAILS
SCALE: AS NOTED DRAWN BY: T SULLIVAN 6/25/2024

QUOTE:
ORDER:
LINE: VELCRO TO FACE OF FRAME
PAGE: PAGE 2
REV: A

PRINT ON: 8 1/2 x 11-(LETTER PAPER)

5 0 FEET 5 10

0 METERS

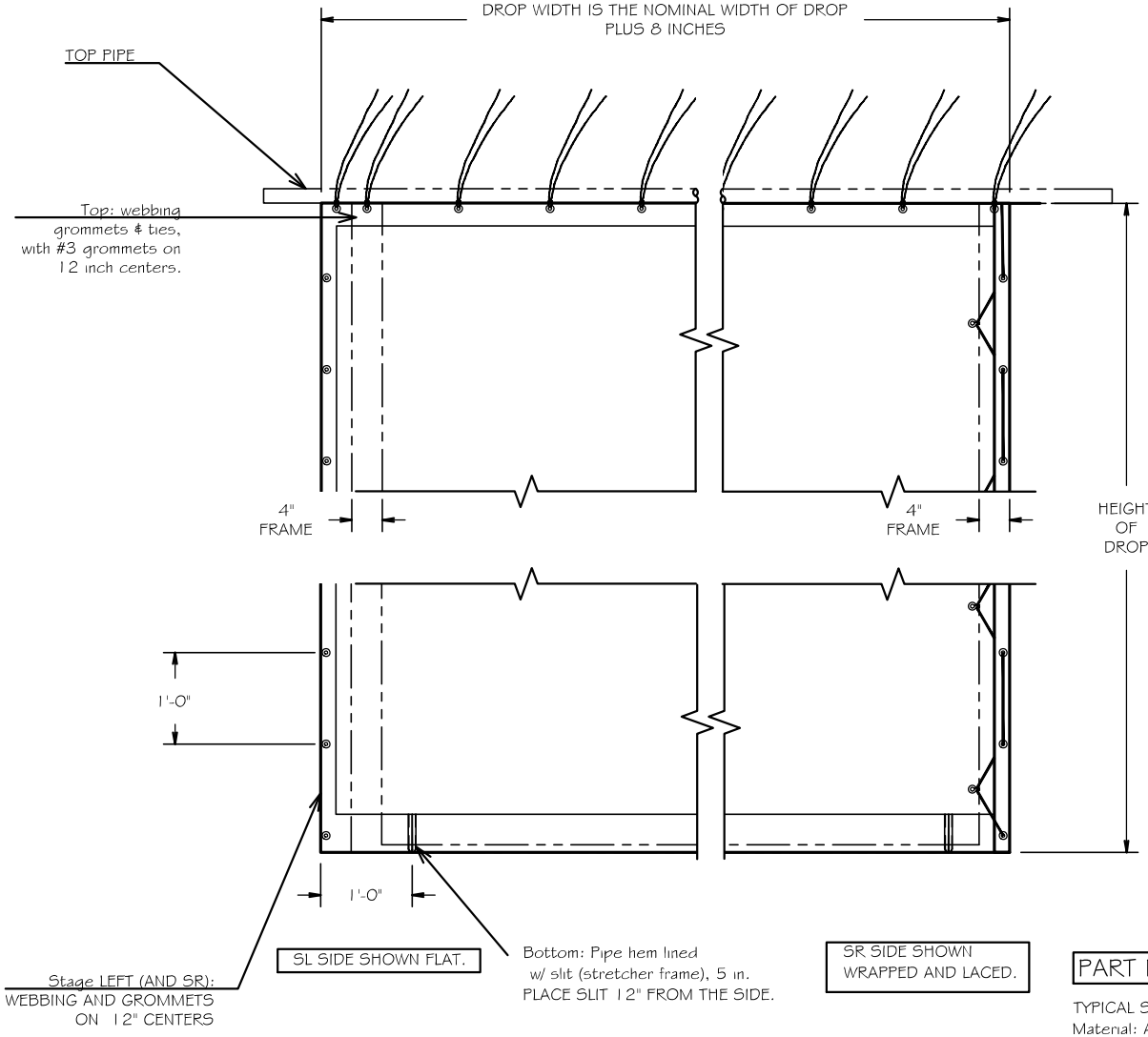


SL SIDE SHOWN FLAT.

SR SIDE SHOWN
WRAPPED AND LACED.

LACE TO FRAME

A DROP FOR STRETCHER FRAME
SCHEMATIC REAR VIEW

SCALE: 1/2"=1'-0"

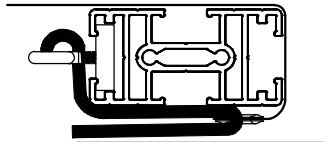

S- DETAIL

LACE DROP TO
STRECHER FRAME
WITH BUNGEE OR ROPE
FROM GROMMETS TO
EYEBOLTS.

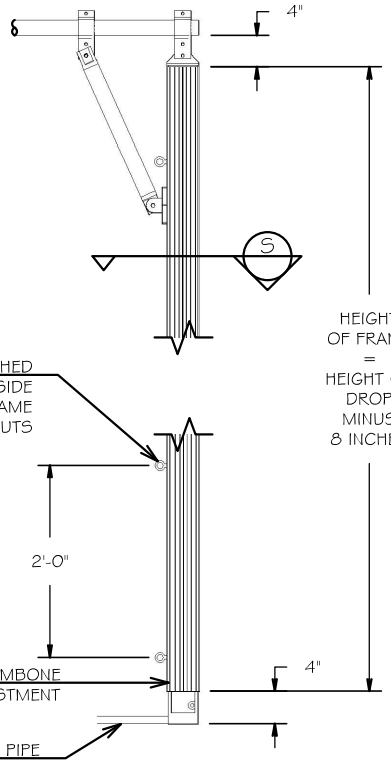


## PART DESCRIPTION

TYPICAL STRETCHER FRAME DROP
Material: AS SPECIFIED
HEIGHT OF DROP IS THE SPECIFIED HEIGHT OF THE DROP
WIDTH OF THE DROP IS THE SPECIFIED WIDTH PLUS + 8"
With 0% Added Fullness, Unlined
Top: webbing grommets & ties, with #3 grommets on 12 inch centers.
Bottom: Pipe hem lined w/ slit (stretcher frame), 5 in.
PLACE SLIT 12" FROM THE SIDE.
Stage Right: WEBBING AND GROMMETS ON 12" CENTERS
Stage Left: WEBBING AND GROMMETS ON 12" CENTERS

This drawing represents visual concepts and construction suggestions only. Please review construction methods and material details for suitability. Final approval is required before construction can begin. Please contact Rose Brand to discuss alterations to the project.


ROSE BRAND
PO BOX 1536 SECAUCUS, NJ 07096
800-223-1624 rosebrand.com


CUSTOMER: ROSE BRAND
PROJECT: STRETCHER FRAME
PIECE: TYPICAL SEWINGDETAILS
SCALE: AS NOTED DRAWN BY: T SULLIVAN 6/25/2024

QUOTE:
ORDER:
LINE: LACE TO FRAME
PAGE: PAGE 3
REV: A

PRINT ON: 8 1/2 x 11-(LETTER PAPER)